NOTE :
ALL RIGHTS RESERVED. THIS DRAWING OR ANY PART THEREOF MUST NOT BE REPRODUCED IN ANY FORM WITHOUT THE WRITTEN PERMISSION OF HIGHLAND TANK.
HIGHLAND TANK SHALL BE RESPONSIBLE ONLY FOR ITEMS INDICATED ON THIS FABRICATION DRAWING UNLESS OTHERWISE NOTED. CUSTOMER IS RESPONSIBLE FOR VERIFYING CORRECTNESS OF SIZE / LOCATION OF FITTINGS , ACCESSORIES & COATINGS SHOWN ON THIS DRAWING

FITTING SCHEDULE

A= 4" ø NPT
B= 2" ø NPT
C= 6" ø NPT (EMERGENCY VENT)

GENERAL NOTES

CAPACITY : 1,000 GALLONS
TYPE : SINGLE WALL, ABOVEGROUND, LIGHT DUTY SKID
NO. REQ. :
MATERIAL : MILD CARBON STEEL
TEST : 5 P.S.I.
MIN. GAUGE OR THICKNESS (PER U.L. 142):
HEADS : 10 GA.
SHELL : 10 GA.
PAINT : INTERIOR : NONE
EXTERIOR : RED PRIMER
CONSTRUCTION : FLAT FLANGED HEADS, LAP WELD ALL EXTERIOR SEAMS ONLY
APPROVED LABELS : U.L. 142
OPERATING PRESSURE– ATMOSPHERIC

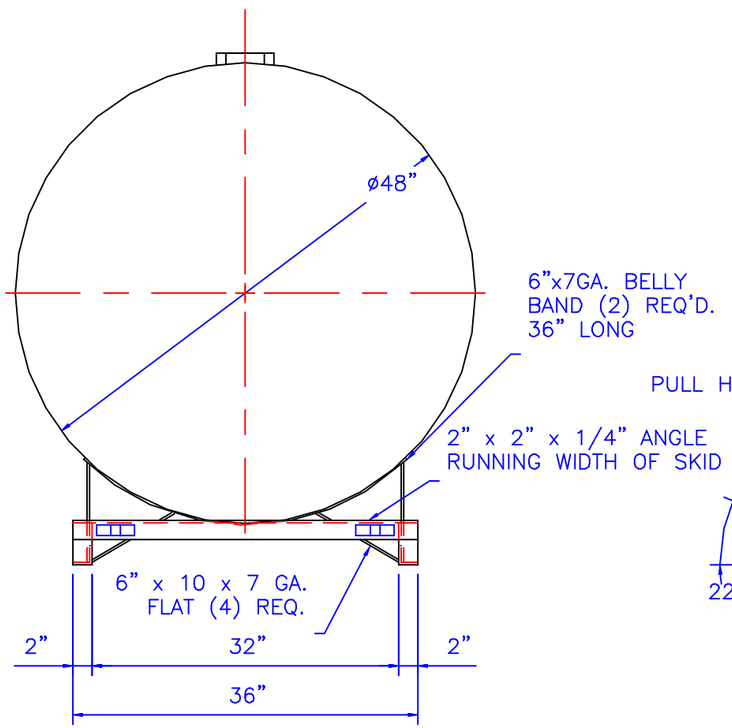

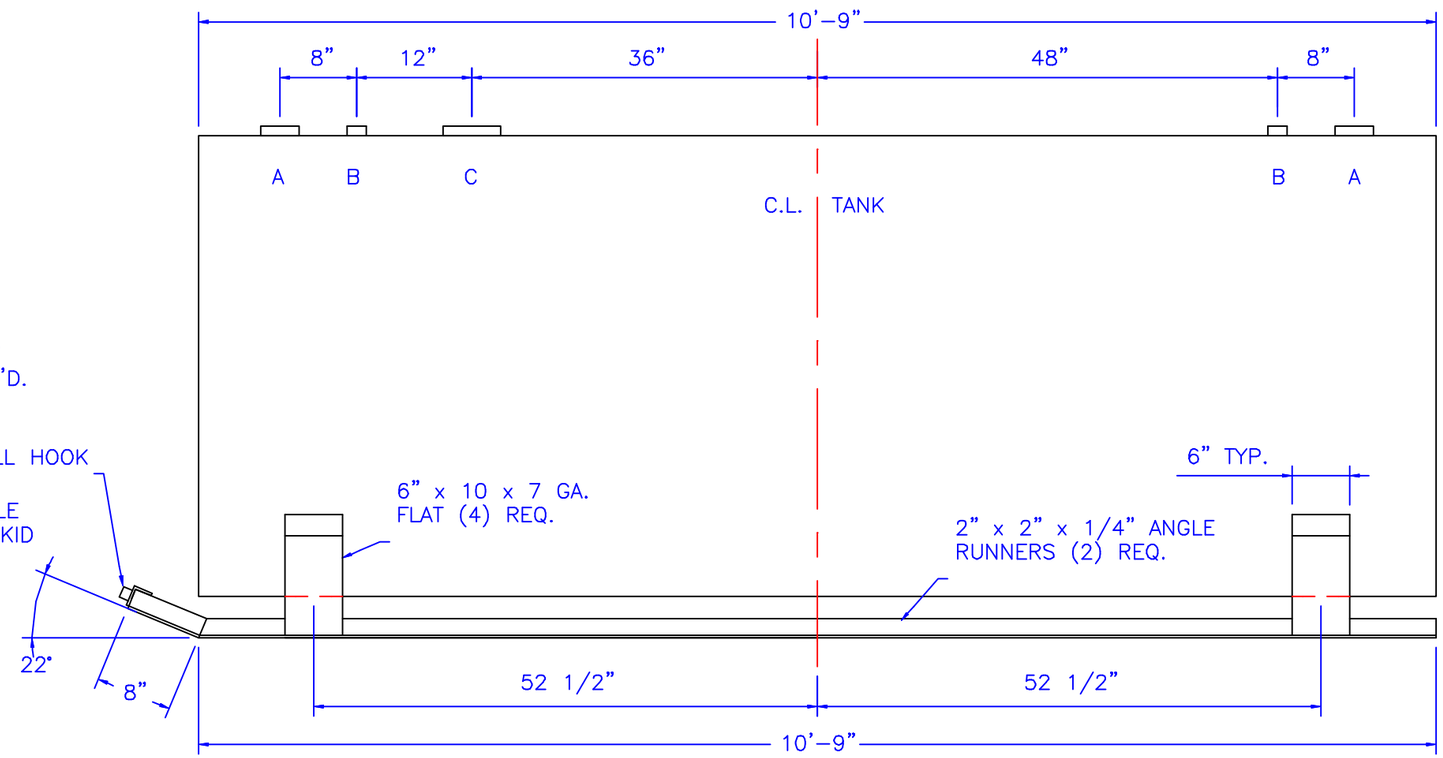

REVISIONS

Highland Tank

1000 GALLON ABOVEGROUND HORIZONTAL SINGLE WALL LIGHT DUTY SKID

CUSTOMER:

PROJECT:

QUOTE NO:

CHK'D BY:

SCALE:	DATE:	DWG. BY:	DWG. NO.:
3/4"=1'-0"			01000SKLDSW10GA