DESIGN DATA

NO. REQ'D–	(1)
CAPACITY–	4000 GALLONS
TYPE–	UNDERGROUND, DOUBLE WALL, HIGHGUARD
MATERIAL–	MILD CARBON STEEL
FLOW RATE–	500 GAL/MIN, 1.114 FT ^{3}/S
GAUGE:	INNER / OUTER
SHELL–	7 GA / 10 GA
HEADS–	7 GA / 10 GA
MAX BURIAL DEPTH–	60"–CONSULT HT FOR DEEPER BURIAL
CONSTRUCTION–	LAP FIT AND WELD ALL EXTERIOR SEAMS ONLY
SURFACE PREPARATION:	
INNER TANK–	NONE
OUTER TANK–	SSPC NO.6 BLAST
COATING:	MATERIAL / THICKNESS
EXTERIOR–	POLYURETHANE / (75 MILS)
INTERIOR–	NONE
OPERATING PRESSURE–	ATMOSPHERIC

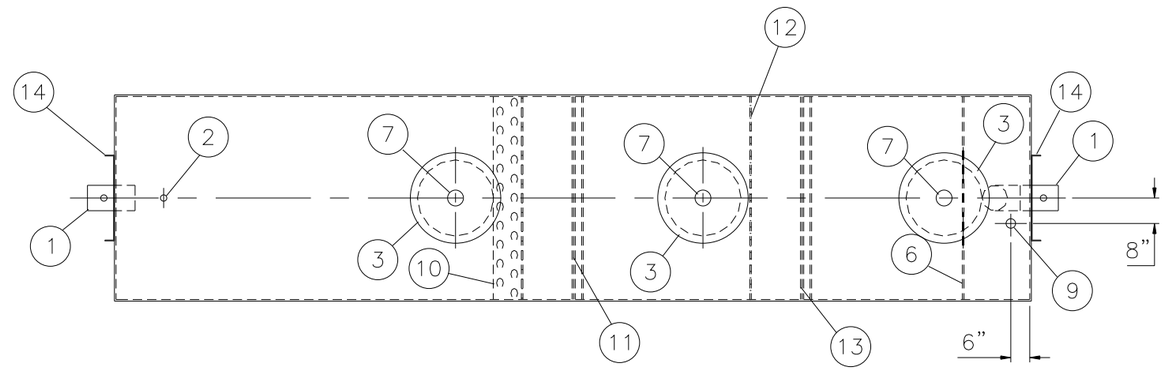

PLAN

NOT FOR FABRICATION

LEGEND

1	CARBON STEEL PIPE STUB WITH 2" FNPT FITTING FOR VENT
2	2" FNPT FITTING FOR VENT
3	24" MANHOLE
4	8" CARBON STEEL ELBOW
5	STRIKER PLATE – 1/4" CARBON STEEL
6	SLUDGE BAFFLE – 7 GA. CARBON STEEL
7	4" FNPT FITTING FOR GAUGE
8	8" CARBON STEEL DOWNCOMER PIPE
9	2" FNPT FITTING FOR LEAK DETECTION WITH INTERNAL PIPE
10	VELOCITY HEAD DIFFUSION SCREEN – 7 GA. CARBON STEEL WITH 3" ø PERFORATIONS SEE DETAIL–A
11	SEDIMENT BAFFLE – 7 GA. CARBON STEEL WITH BRACING ON OUTLET SIDE
12	TRASH SCREEN – 7 GA. CARBON STEEL WITH 2" ø PERFORATIONS SEE DETAIL–B
13	SEDIMENT WEIR – 7 GA. CARBON STEEL WITH BRACING ON OUTLET SIDE
14	HTM SPIN BRK'T – MFG USE ONLY – NOT TO BE USED FOR FIELD INSTALLATION

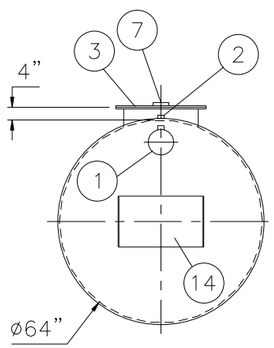

END VIEW

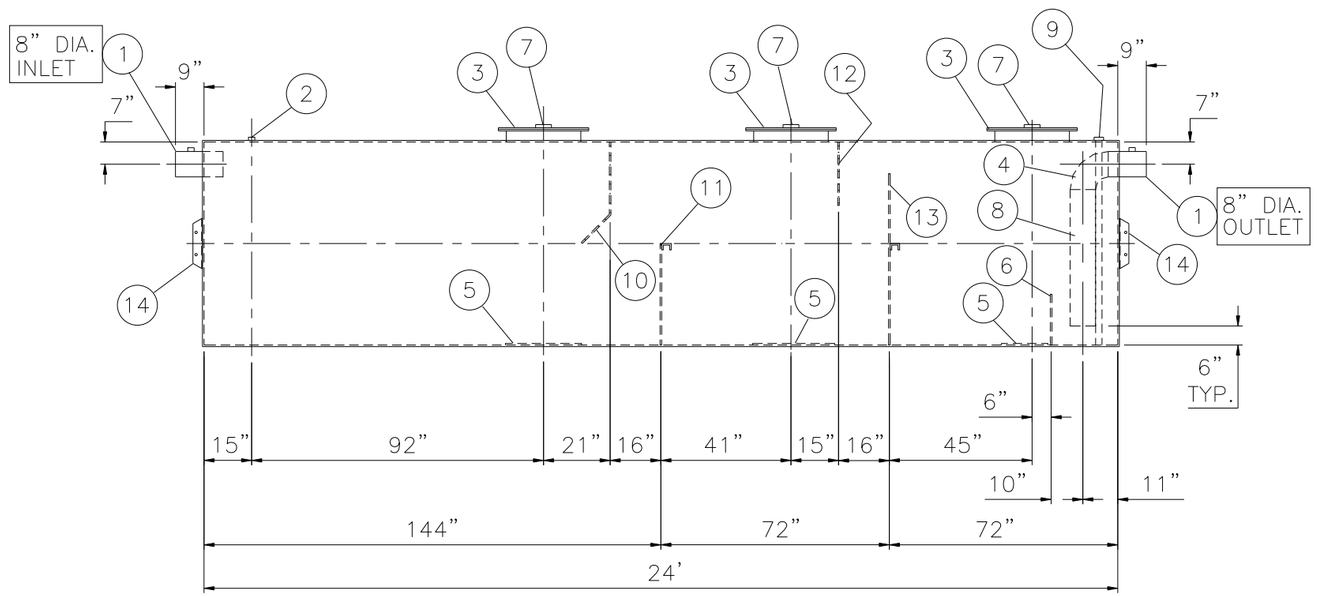

ELEVATION

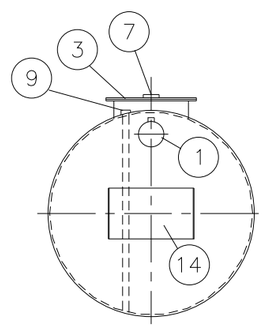

END VIEW

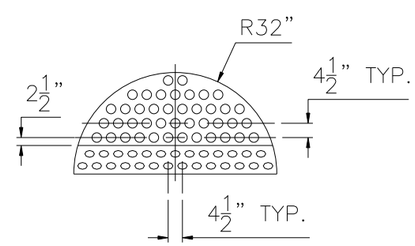

DETAIL–A

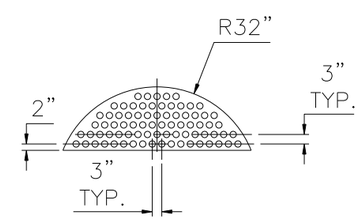

DETAIL–B

NOTES

1. POLYURETHANE HIGHGUARD TANK IS NOT APPROVED FOR THE STORAGE OF HEATED PRODUCTS
2. 15000 VOLT SPARK TEST PROVIDED AT FACTORY
3. ALL VENT PIPING BY INSTALLER
4. BOLT ON EXTENSIONS ARE NOT PROVIDED WITH A STANDARD UNIT. CUSTOMER TO ADVISE IF EXTENSIONS ARE NEEDED AND WHAT THEIR LENGTHS SHOULD BE

NOTE: ALL RIGHTS RESERVED. THIS DRAWING MUST NOT BE REPRODUCED IN ANY FORM WITHOUT THE WRITTEN PERMISSION OF HIGHLAND TANK®. HIGHLAND TANK® SHALL BE RESPONSIBLE ONLY FOR ITEMS INDICATED ON THIS FABRICATION DRAWING UNLESS OTHERWISE NOTED. CUSTOMER IS RESPONSIBLE FOR VERIFYING CORRECTNESS OF SIZE AND LOCATION OF FITTINGS, ACCESSORIES, AND COATINGS SHOWN ON THIS DRAWING.

HIGHLAND TANK & MFG CO.

Highland Tank®

4000 GALLON DOUBLE WALL HIGHGUARD SOLIDS STORMWATER INTERCEPTOR

CUSTOMER:

PROJECT:

QUOTE NO:

CHK'D BY:

SCALE:	DATE:	DWG. BY:	DWG. NO.:
1/4"=1'-0"	9-16-09		04000SSIHGDW